INSTALLATION INSTRUCTION SHEET
PCL-1 Pulse-to-Current Loop Converter

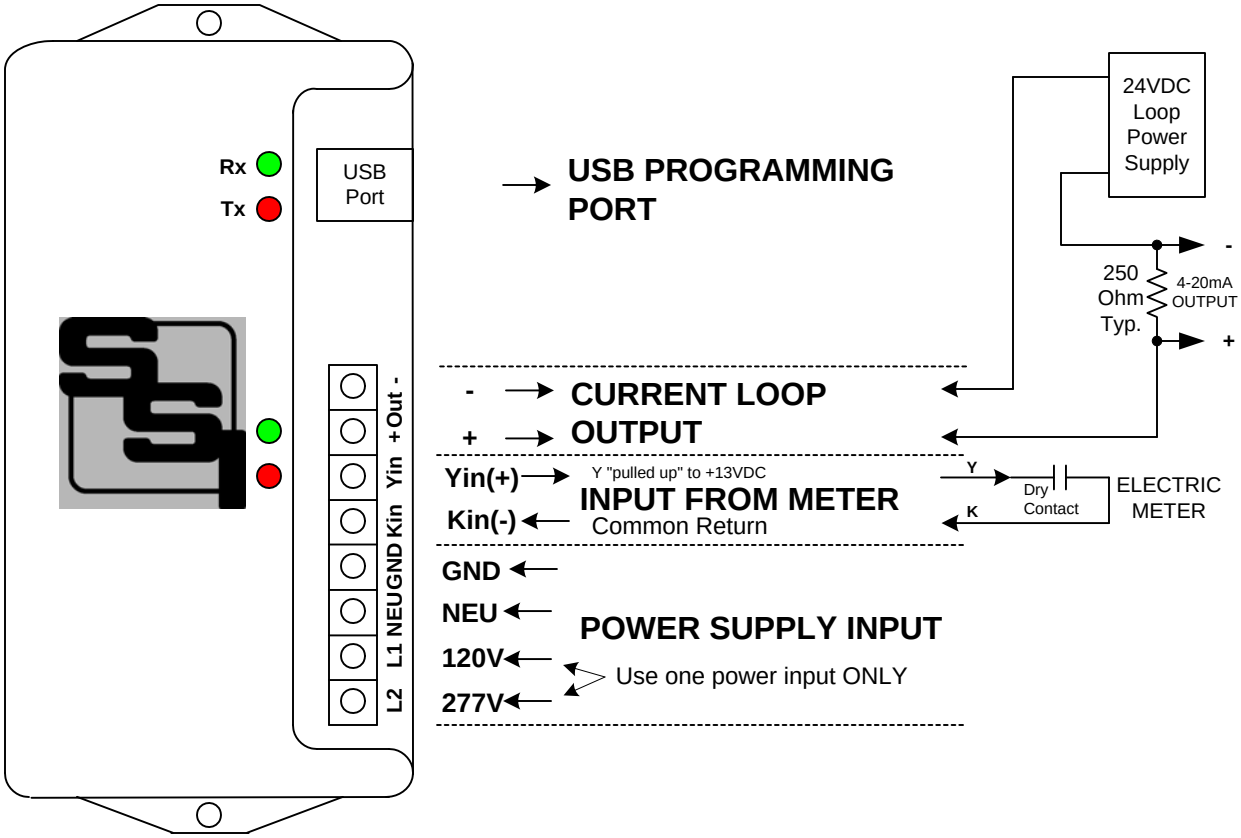

MOUNTING POSITION - The PCL-1 can be mounted in any position. Two mounting holes are provided.

POWER INPUT - The PCL-1 is powered by an AC voltage of between 90 and 300 volts. For 208 to 277VAC, connect the AC line's "hot" wire to the **L2** terminal. For 120VAC, connect the AC line's "hot" wire to the **L1** terminal. Connect the **NEU** terminal to the AC line's "neutral" wire. Connect **GND** to electrical system Ground. Ground must be connect for proper operation. DC power supply input available by special order.

METER INPUT - The PCL-1 has a 2-Wire (Form A) input. Connect the PCL-1's "Kin" and "Yin" input terminals to the meter's "K" and "Y" output terminals. The PCL-1's "Kin" terminal is the common return. The +13VDC wetting voltage is "pulled-up" internally on the PCL-1's Yin terminal. Each closure of the meter's Y output will "pull down" the input line to the common return. The Red LED lights each time a pulse is received. All settings are programmed into the PCL-1 by means of the USB Programming Port, and are saved in Non-Volatile EEPROM memory so they are never lost or not inadvertantly changed. See page 5 for "Programming the PCL-1".

OUTPUT - The PCL-1 outputs a current of 4 to 20mA proportional to the KW demand as calculated by the pulse value and system settings. Two output modes are available. Instantaneous or Average KW demand may be selected for output. The Green LED lights each time the Digital to Analog converter outputs a value. Transient voltage protection for the output is provided by MOVs and zener diodes on board. The 4-20mA loop must be powered by a 24VDC Loop Power Supply, which is external to the PCL-1. This power supply supplies all power to the output stage of the PCL-1 and is optically isolated from the rest of the PCL-1.

OPERATION - See the following pages for a full explanation of the operation of the PCL-1.

SOLID STATE INSTRUMENTS
a division of Brayden Automation Corp.
6230 Aviation Circle, Loveland, Colorado 80538
Phone: (970)461-9600
E-mail: support@brayden.com

WORKING WITH THE PCL-1 RELAY

Operation: The PCL-1 Pulse to 4-20mA Current Loop Converter Module is designed to output an analog voltage with a current between 4 and 20 milliamps, proportional to the value of the instantaneous or average KW demand. Below is an example of how the PCL-1 works and how it is programmed.

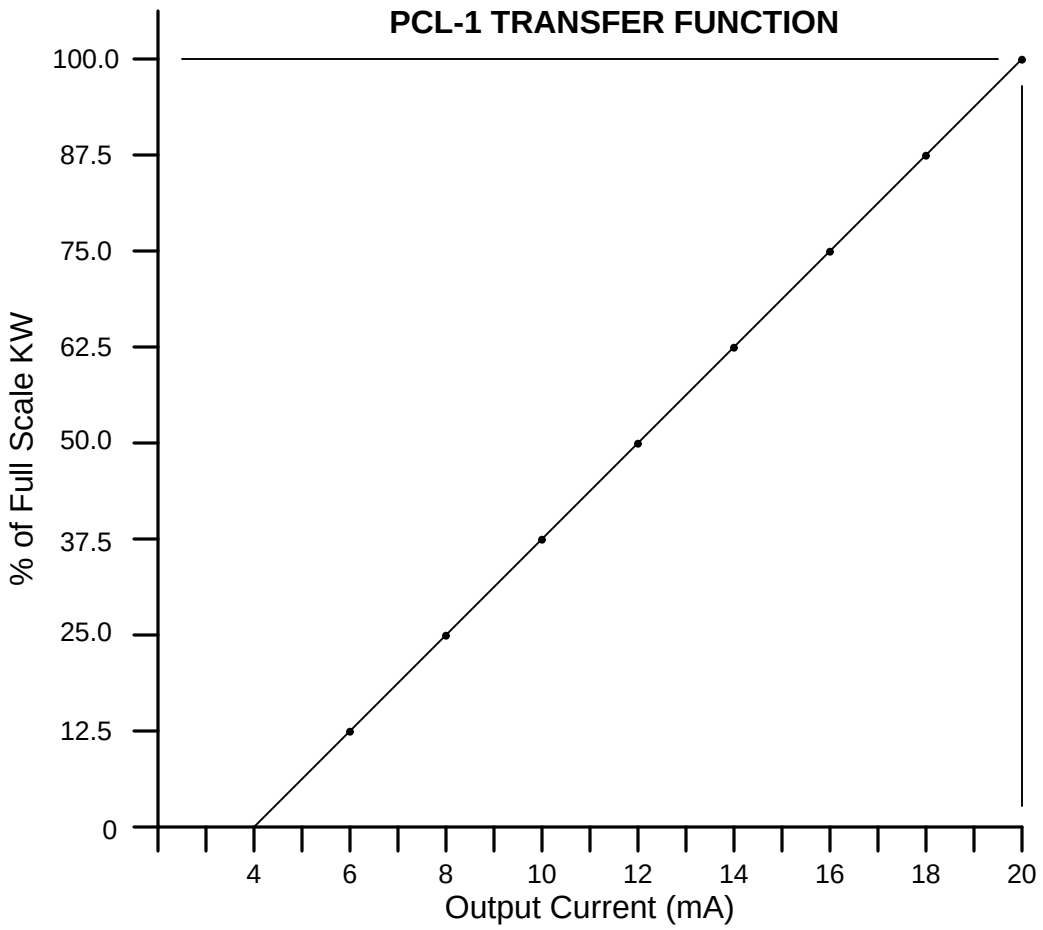

Range	FS(kw) 100%	Res (KW)
1	100	.39
2	200	.78
3	500	1.96
4	1000	3.92
5	2000	7.84
6	5000	19.61
7	10000	39.21
8	20000	78.43

Example, if a building has a 483KW maximum demand, set the Full Scale Value at 500KW. Therefore, 500KW = 20mA. 0KW = 4mA. Resolution would be 500 / 255 or 1.961KW (or .3922% of full scale) per step. Assume the electric meter's PKe Pulse value (3-Wire) is 240 wh/pulse (or .240kwh/pulse). The 2-Wire equivalent is .480kWh/p or 480wh/p. Suppose that pulses being received at this moment in time are at a rate of one pulse per 4 seconds and the load is steady. Conversion would be: .480 Kwh X 3600 = 1728 kW-sec / 4 sec = 432 kW. Output current would be 432/500 = 86.4% X 16mA = 13.824mA + 4mA = 17.824mA out. Output resolutiion is 16mA / 256 steps or .0625mA per step. So, 256 * 86.4% = 221.18 steps of 256. Rounding off 221 X .0625mA = 13.8125mA + 4mA = 17.8125mA output. Accuracy = 99.9168%.

PCL-1 Pulse to 4-20mA Current Loop Converter Transfer Function		REVISIONS		
		NO.	DATE	DESCRIPTION
DATE ORIGINAL 10/29/20	SCALE N/A			
LATEST REVISION	JOB NO.	CHECKED	DRAWN WHB	

Solid State Instruments div.
Brayden Automation Corp.
6230 Aviation Circle
Loveland, CO 80538
(970)461-9600
support@brayden.com
www.solidstateinstruments.com

PCL-1 Wiring Diagram

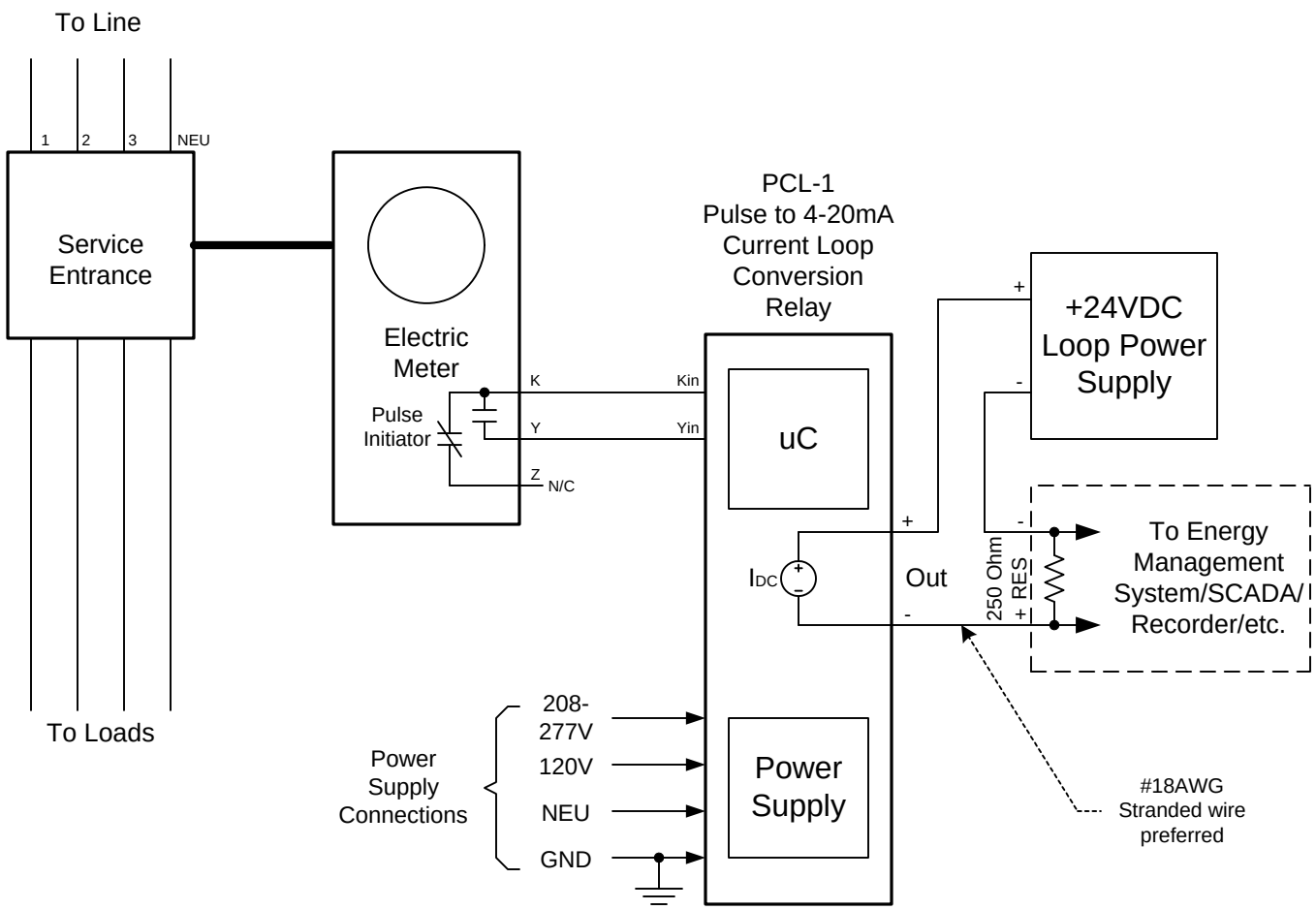

PCL-1WiringDiagram.vsd

PCL-1 Pulse to 4-20mA Conversion Relay Wiring Diagram		REVISIONS	
		NO. / DATE / DESCRIPTION	
DATE ORIGINAL 10/29/20	SCALE N/A		
LATEST REVISION	JOB NO.	CHECKED	DRAWN WHB

Brayden Automation Corp./
Solid State Instruments div.
6230 Aviation Circle
Loveland, CO 80538
(970)461-9600
support@brayden.com
www.solidstateinstruments.com

PCL-1 4-20mA Current Loop Converter Module

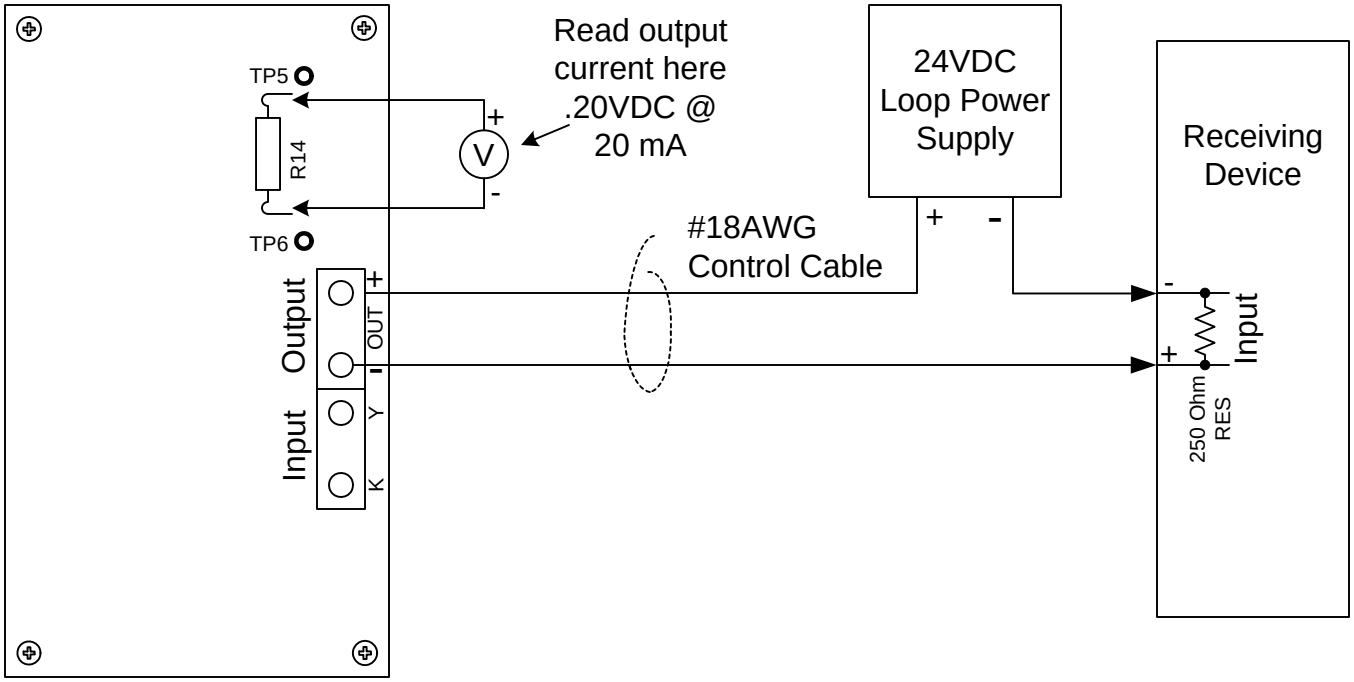

Testing the PCL-1

Using a good quality Digital Volt Meter (DVM) which is capable of reading very low voltages accurately, connect the leads across Resistor R14 above the current loop output connector. Put the PCL-1 into the test mode.(See Page 5.) The PCL-1's output must be connected to the receiving device's input and must be powered up, or connected to a suitable test setup. The voltage across R14 is proportional to the output current. At 20mA of output current, the output voltage across R14 will be .20VDC. At 4mA of output current, the output voltage across R14 will be .04VDC. In test mode the output current will sweep from 4mA to 20mA in 10 seconds, and remain at 20mA for 4 seconds. It will reset to 4mA for 4 Seconds and then repeat. Therefore, your meter will climb from .04V to .20 V in 10 seconds, stay at .20V for 4 seconds, go to .04V for 4 seconds and then climb again from .04 to .20V. This repeats continuously while in the test mode. While in Test Mode, the pulse input is ignored and does not matter if it is connected or not. Take the PCL-1 out of test mode and return to Normal Operation mode. Connect electric meter's pulse output to the input of the PCL-1 if not already connected. Ensure that the red LED next to the Yin terminal is on when the Y input line is low(has continuity with the Kin terminal).

Interfacing the PCL-1 to the Receiving Device

The receiving device must have an input suitable for accepting a 4-20mA current, equipped with a 250 ohm precision resistor, at a maximum voltage of +5VDC. Use a #18AWG to #22AWG two-conductor control cable between the PCL-1 and the receiving device. 4mA will yield 1VDC across the 250 ohm resistor, while 20mA will yield 5VDC.

Programming

The PCL-1 requires you to connect it via it's USB port to a computer for programming. See Page 5. Parameters that must be programmed are:

Pulse Value in Watt-hours, from 1 to 65,535 watthours per pulse
Full Scale Value; Range 100 to 20,000 kW
Operating Mode selection, either Instantaneous or Average
Demand Averaging Interval (if the above selection is Average)
Enter and Exit Test Mode

Technical Support

Contact Brayden Automation Corp. Tech Support at 888-BRAYDEN (888-272-9336) if you need assistance on the application of the PCL-1 4-20mA Pulse to Current Loop Converter Module.

Programming the PCL-1 4-20mA Current Loop Converter Module

Software Required

The PCL-1 is programmed using SSI's Universal Programmer, available as a free download on the SSI website at http://solidstateinstruments.com/productpages/pcl-1-pulse-to-current-loop-converter.php, under the Documentation Tab. Download the software and install it.

Using the USB programming cable that accompanied the PCL-1, plug the "B" end into the PCL-1. Plug the "A" end into your computer's USB port. Start the SSI Universal Programmer software and make sure that the Green LED's labeed USB Cable Connected and Serial Connected are both lit. The current settings of your PCL-1 should populate the four programming fields or "Boxes".

To READ all parameters, click on the <Read Parameters> button.

To program a new setting into the PCL-1, enter or pick the desired value depending on the field. Once the values are set as desired, click on <Send Parameters>.

Pulse Value: Enter the Form A (2-wire) pulse value in Watthours, with a number from 1 to 65535. (You will need to multiply your kWh value for the pulse by 1000 to get the watthour value.) You may not enter a decimal point. The value must be in whole (integer) numbers. The default value is 10 wh/p. For example, if your Form A (2-Wire) value is .144 kWh/pulse, then your watthour value per pulse is 144wh/p. Enter 144 and click on <Send Parameters>.

Full Scale kW: Select the desired Full Scale KW range from the drop down menu: 100, 200, 500, 1000, 2000, 5000, 10000 or 20000. The default value is 100kW. For example, 500kW full scale, select 500 and click <Send Parameters>.

Output Mode: Select the desired Output Mode, either Instantaneous or Average, from the drop down menu. Instantaneous Mode means that the instantaneous demand on the 4-20mA output will be updated each time a new pulse is received and the new kW demand calculated. The Average Mode means that the kW demand will be averaged over the demand interval selected and the result will be updated on the 4-20mA current loop output every 15 seconds. The default is Instantaneous mode. When reading the Output Mode, it will return an Inst or Avg. Select Inst or Avg and click <Send Parameters>.

Interval min: Select the desired Demand Averaging Interval (if the above Output Mode selection is Average): Interval lengths are: 1 min, 5 min, 10 min, 15 min, 30 min, 60 min. The default is 15 minutes. For example select 5 for a 5 minute demand averaging interval then click on <Send Parameters>. This setting is not used if you are operating in the Instantaneous output mode.

Test Mode: Press the <Toggle Test> button to put the PCL-1 in the test mode. Once in test mode, the PCL-1 begins a sweep from 4mA to 20mA in 10 seconds. It will remain at 20mA for 4 seconds, then reset to 4mA for 4 seconds. It will start again and repeat this sequence continuously until power to the PCL-1 is cycled. A dialog box will pop up giving instructions on exiting the test mode.

Monitor Mode: The monitoring mode allows you to see what the kW output of the PCL-1 is while pulses are being received. Click on the <Monitor> button to start monitoring. Each time a pulse is received and an output value is written, the kW value will be displayed. Click <Stop Monitoring> to exit the Monitor mode. The programming modes are unavailable while the PCL-1 is in the Monitoring mode.

When programming is complete, simply close the SSI Universal Programmer software. All parameters will be saved in EEPROM memory in the PCL-1. EEPROM memory uses no battery for backup so all parameters will never be lost. Data retention is typically 10 years in absence of power.

Technical Support

Contact Brayden Automation Corp. Tech Support at (970)461-9600 if you need application assistance or technical support.