RTR-22+

Standard Solid State

INSTRUCTION SHEET
PULSE ISOLATION RELAY

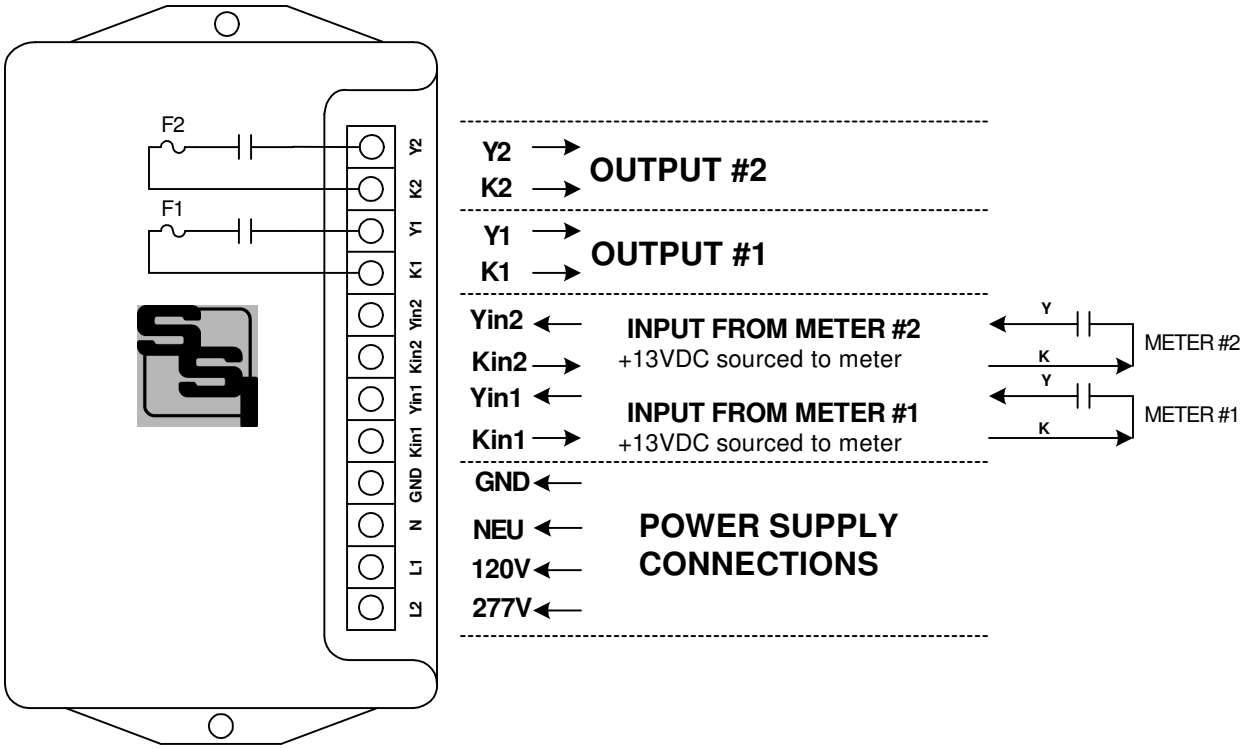

MOUNTING POSITION - The RTR-22+ may be mounted in any position.

POWER INPUT - To power from a 120VAC supply, connect the "hot" lead to the **L1** terminal and the neutral to the **NEU** terminal. For a 277VAC supply, connect the "hot" lead to the **L2** terminal and the neutral to the **NEU** terminal. Connect the **GND** terminal to Ground. Use EITHER L1 or L2, but do not use both at the same time. If Neutral does not exist at the metering location, connect the NEU and GND terminals BOTH to Ground. Inline fuse recommended.

METER CONNECTIONS - The RTR-22+ has two 2-Wire(Form A) inputs. Connect the "Kin1" and "Yin1" terminals to the first meter's "K" and "Y" terminals. Connect the "Kin2" and "Yin2" terminals to the second meter's "K" and "Y" terminals. The RTR-22+'s "Yin$_x$" terminals provide a +13VDC "pulled up" wetting voltage to the meter's Y dry-contact output terminal. The "Kin" terminal is the common return.

RELAY INPUT AND OUTPUT CONFIGURATION - The RTR-22+ has both input and output configuration switches. Input debouncing time can be set at 50uS, .5mS, 5mS or 20mS, meaning that the input pulse width must be longer than the filter time to be recognized as a valid pulse. See Page 2.

OUTPUT - Both 2-wire (Form A) outputs are configured as dry-contact outputs, meaning that no voltage is sourced from these outputs and thus, must be supply by the receiving device. Transient voltage protection for each contact is provided by an on-board MOV transient suppression device. The outputs are limited to 100 mA max. One-tenth (1/10) Amp fuses are supplied standard on each output. Switch S1.3 and S1.6 set the Normal or Fixed output mode for Channels 1 and 2 respectively. The Normal mode sets the output pulse width equal to the input's pulse width. The Fixed mode sets the output for a selected fixed pulse width. More information on Normal and Fixed pulses on pages 2 and 3.

SOLID STATE INSTRUMENTS

a division of Brayden Automation Corp.

6230 Aviation Circle, Loveland, Colorado 80538

Phone: (970)461-9600 Fax: (970)461-9605

E-mail:support@solidstateinstruments.com

Revision: 3/12/2015

P/N: 05222-97006A

WORKING WITH THE RTR-22+ RELAY

OPERATING MODES: The RTR-22+ Repeating Pulse Relay allows the outputs to be configured for either the "Normal" or "Fixed" pulse output mode. In the *Normal* mode, the outputs simply follow the input, and thus, the output pulse widths are equal to input pulse widths. The Normal mode is the default mode. Set Dip Switch **S1.3 DOWN** for the Fixed mode on Channel 1. Set Dip Switch **S1.6 DOWN** for the Normal mode on Channel 2. With the "normal" output configuration selected, pulse speeds of up to 72,000 pulses per hour (20/sec) are possible. Figure 1 below shows the timing diagram for the "long" output mode.

Figure 1: 2-Wire NORMAL Output Operation

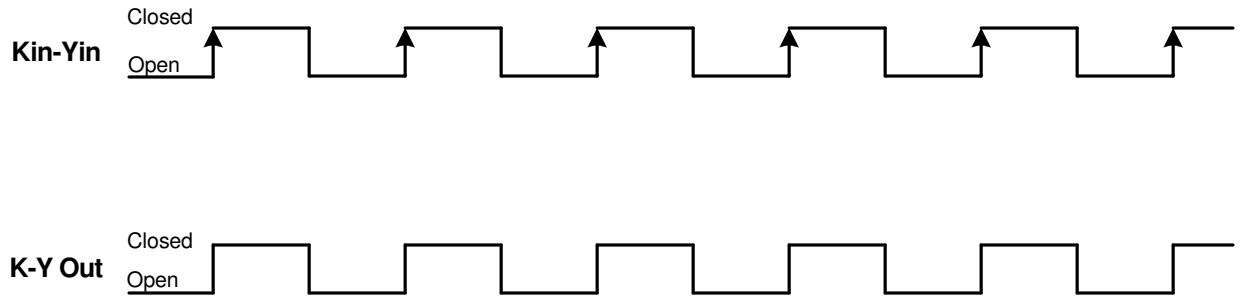

If the *Fixed* Mode is desired on either or both channels, set Dip Switch **S1.3 UP** for the fixed mode on Channel 1. Set Dip Switch **S1.6 UP** for the fixed mode on Channel 2. In the *Fixed* output mode, shown in Figure 2 below, an output pulse (K-Y closure) with a selected width (T1) occurs each time the input is triggered.

Figure 2: 2-Wire SHORT Output Operation

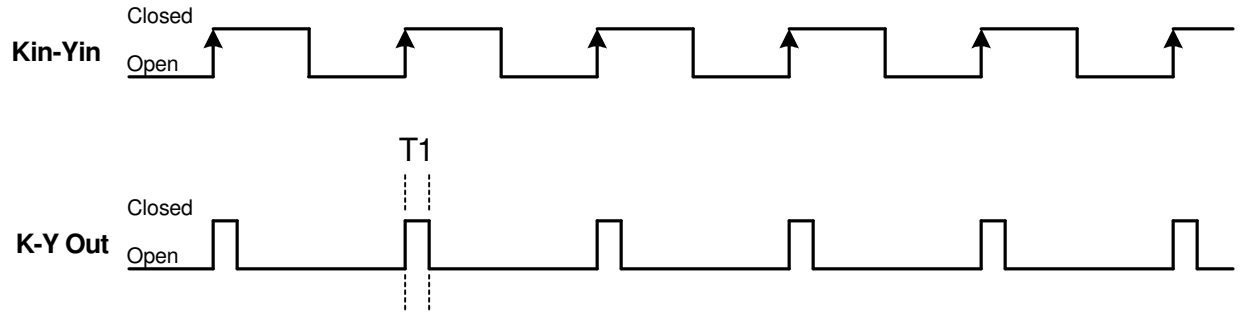

As a general guideline, the input pulse rate should not be greater than two times the output time selected. For example, if a 500mS output time is selected, the input pulse rate should be no faster than 1 pulse per second. Contact the factory for technical support at (888)272-9336.

CONFIGURING THE RTR-22+ RELAY

INPUT FILTER TIMES - The RTR-22+ contains four different input filtering or "debouncing" options. A pulse received at the RTR-22+' input must be present for at least the specified amount of time to be considered a valid pulse. If a pulse is received that is less than the filter time, it will be ignored. Minimum pulse times can be set in the following times: 50uS, .5mS, 5mS or 20mS. For most electric meter pulse applications, the 20mS input time will be satisfactory. For higher speed applications with water or gas meters, the minimum input time may need to be reduced. The table below shows how to set Dip Switches **S1.1** and **S1.2** to set the input filter or debounce time.

Table 1

S1.1	S1.2	mS
Dwn	Dwn	20
Dwn	Up	5
Up	Dwn	.5
Up	Up	50uS

FIXED MODE OUTPUT PERIOD - Output times are independently selectable for each channel as follows: 50mS, 100mS, 200mS and 500mS. When **Switch S1.3** is **UP**, Channel 1's output is in the "fixed" mode. **Switches S1.4** and **S1.5** select the output duration time (Table 2) for Channel 1. When **Switch S1.6** is **UP**, Channel 2's output is in the "fixed" mode. Switches **S1.7** and **S1.8** select the output duration time (Table 3). The receiving equipment may require pulses to be of a given minimum length to be considered a valid pulse. If additional input pulses are received while a fixed-length output pulse is timing out, the RTR-22+ will store the received pulse(s) and output them as soon as the time has timed out. The time between pulses is the same as the specified pulse time, thus giving a 50% duty cycle. Up to 255 output pulses may be stored. If more than 255 output pulses are stored for either channel, the RED Overflow LED will light until the pulse count has decremented to a number less than 255. Pulses are not stored in the event of power failure. Thus, each channel's output register will be reset to zero upon power-up.

Table 2 - Chan1

S1.4	S1.5	mS
Dwn	Dwn	50*
Dwn	Up	100
Up	Dwn	200
Up	Up	500

Table 3 - Chan 2

S1.7	S1.8	mS
Dwn	Dwn	50*
Dwn	Up	100
Up	Dwn	200
Up	Up	500

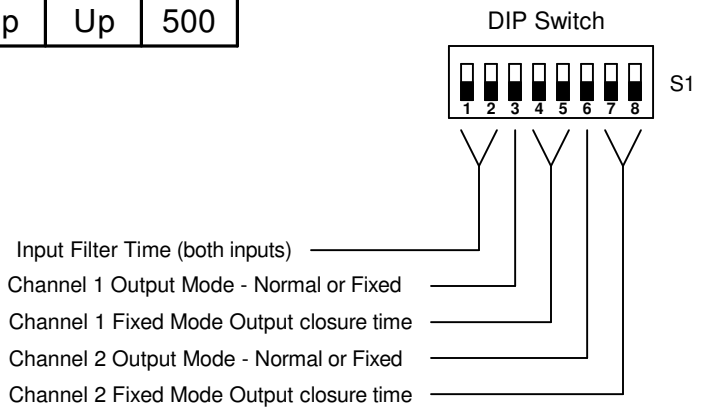

RTR-22+ Wiring Diagram

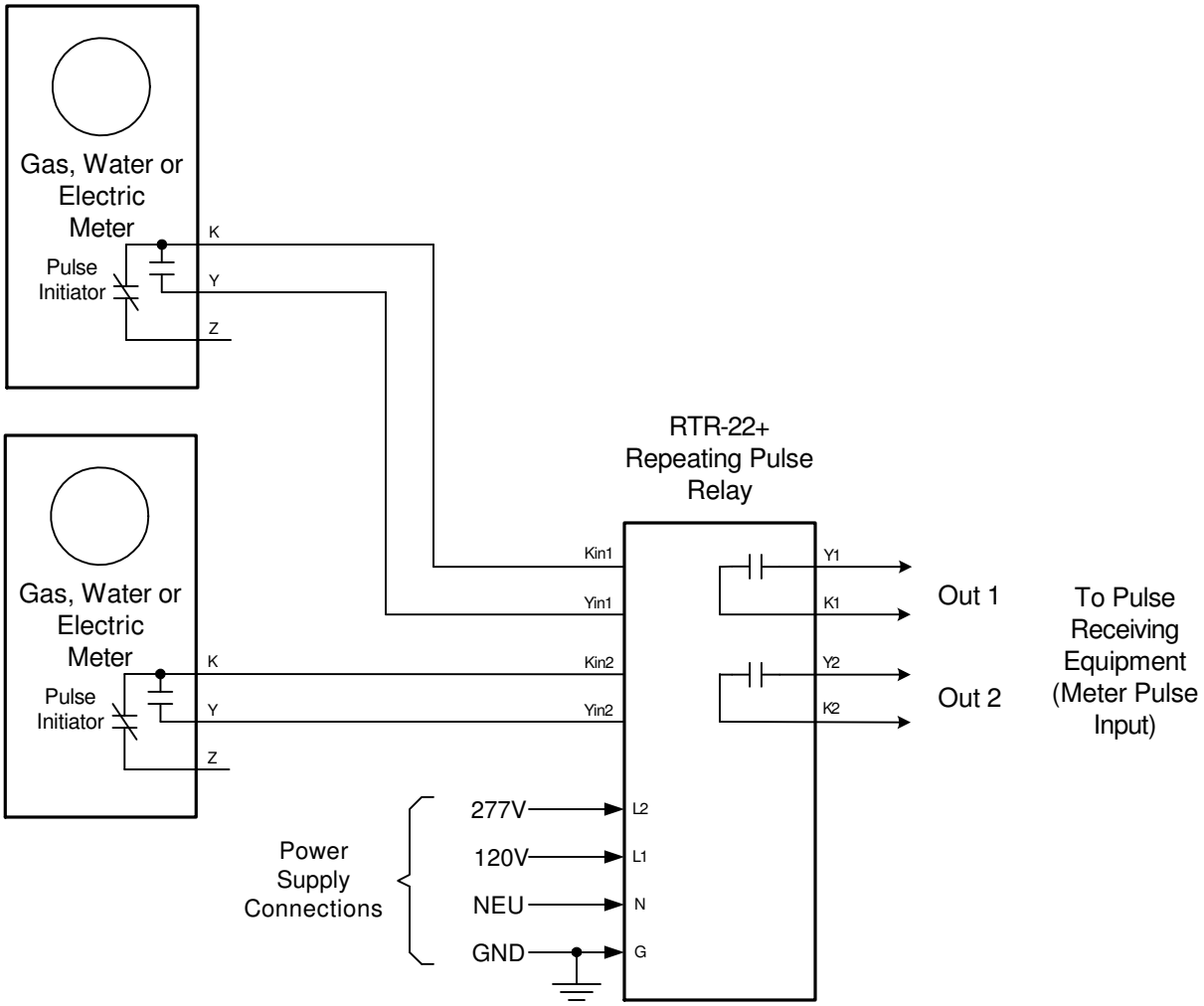

RTR-22+ WiringDiagram.vsd

RTR-22+ Pulse Isolation Relay Wiring Diagram		REVISIONS		
		NO.	DATE	DESCRIPTION
DATE ORIGINAL 3/12/2015	SCALE N/A			
LATEST REVISION	JOB NO.	CHECKED	DRAWN WHB	

Brayden Automation Corp./
Solid State Instruments div.
6230 Aviation Circle
Loveland, CO 80538
(970)461-9600
(970)461-9205 fax
www.solidstateinstruments.com