SPS-6-15

SOLAR POWER SUPPLY INSTRUCTION SHEET

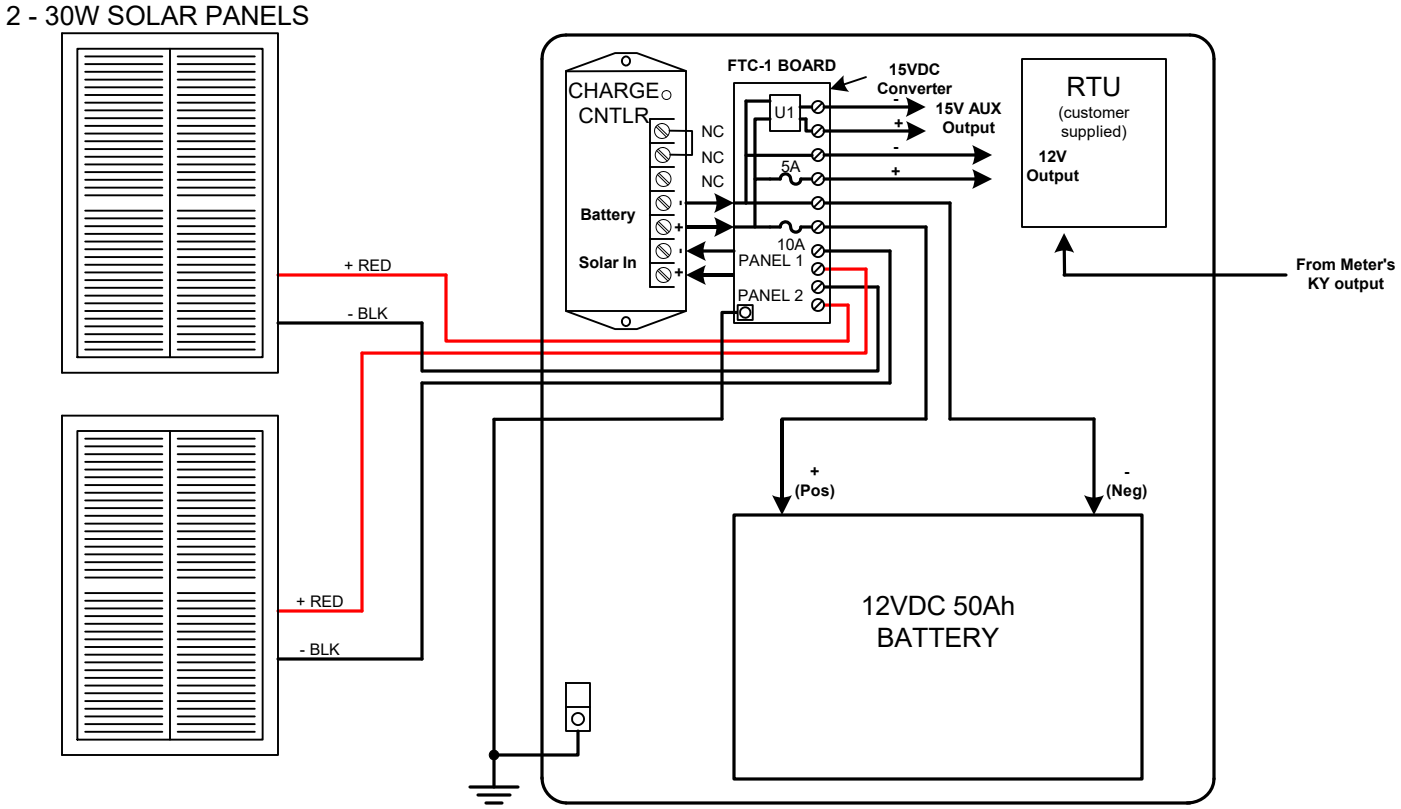

MOUNTING POSITION - The SPS-6-15 Enclosure must be mounted in an upright position so that the battery is placed on the bottom of the enclosure. Mount the solar panels using the metal mounting systems provided to get the correct mounting angle pursuant to the instructions included in the mounting bracket kits. The solar panel mounting bracket is designed to attach to a pole or building. Solar Panels may not be shaded by trees or a building at any time.

POWER INPUT - Connect the Solar Panels' positive leads to the "+" inputs for Panel 1 and Panel 2 on the termination board. Connect the solar panels' negative lead to the "-" inputs for Panel 1 and Panel 2 on the termination board. Connect the electrical system ground to the grounding bracket on the mounting panel. GROUND MUST BE CONNECTED, either to the electrical system ground or a ground rod.

LOAD CONNECTIONS - The **LOAD** terminals supply +12VDC to a Load. Connect the 12V "+" Load terminal to the load's positive "+" lead. Connect the 12V "-" Load Terminal to the load's negative "-" lead. The **AUX OUT** terminals provide a +15VDC output. Connect the Auxiliary Load output terminals to the Load requiring 15VDC, + to the positive input and - to the negative input

METER CONNECTIONS - Connect the meter's K and Y pulse output terminals to the RTU's input terminals.

POWER UP - Connect the marked RED lead with the RING terminal to the Battery's positive **BATT(+)** terminal.

FUSES - 10 Amp AGC or 3AG fuses are provided on the termination board for the battery's positive (+) terminal and the load terminal. 5 Amp fuses are provided for the solar panels. Fuse sizes may be reduced to a lower amperage if desired.

NORMAL OPERATION - Under normal circumstances the solar panel will output between 10 and 17 volts to the charge controller. The length of time that the battery will hold up the RTU or similar load is directly related to the discharge rate. The lower the discharge rate the longer the battery's charge will last. The hold-up time without any recharge from the solar panel for a 200mA load is approximately 7 days. Limit the load current to the lowest possible level for the best results.

SOLID STATE INSTRUMENTS
by Radian Research, Inc
3852 Fortune Dr, Lafayette, IN 47905
Phone: (765) 449-5576
Mail: technicalsupport@radianresearch.com